note: all dimensions are in meters

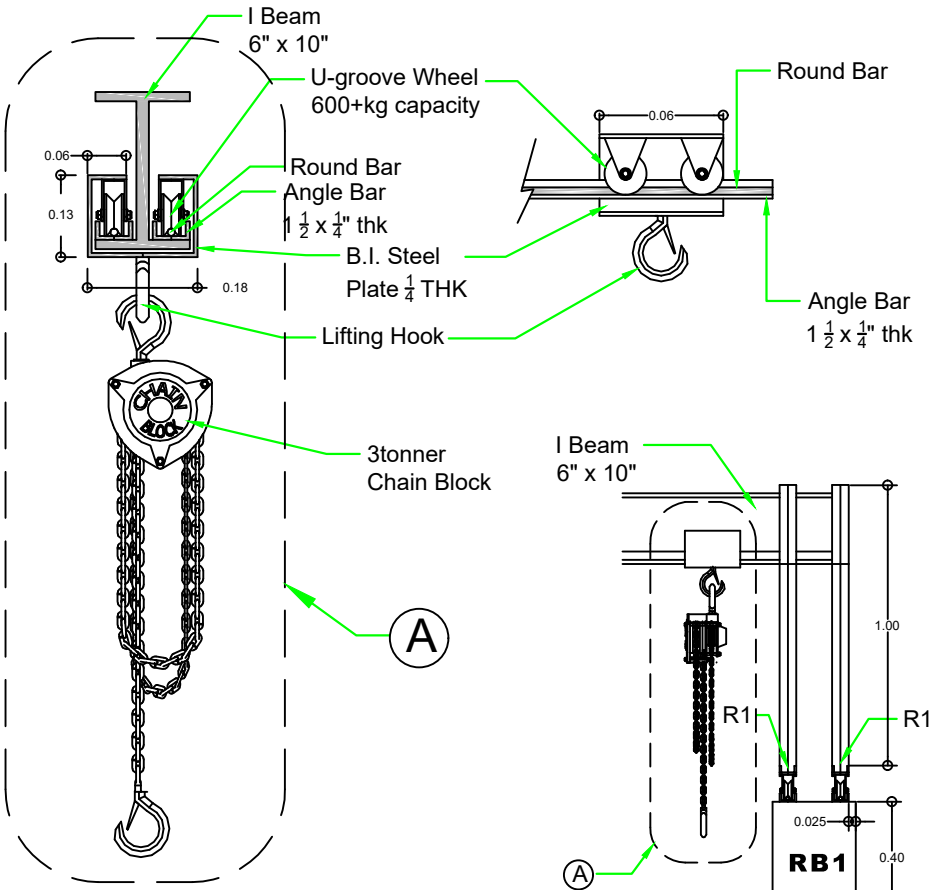

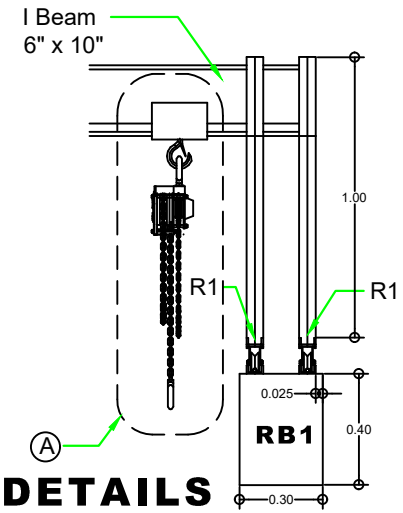

B DETAILS

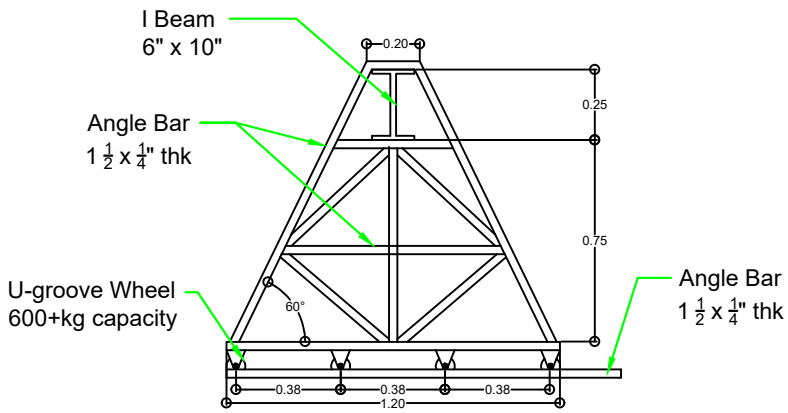

R1 DETAILS

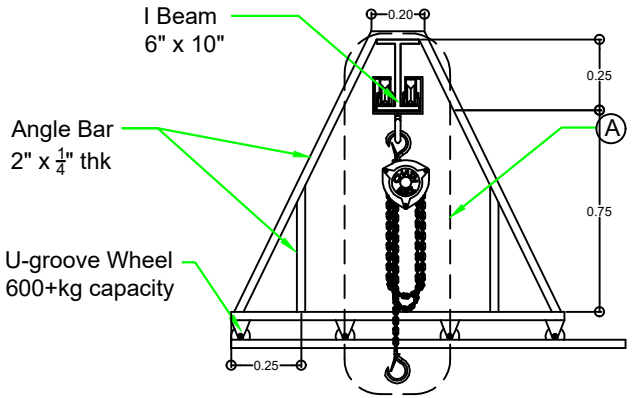

R2 DETAILS

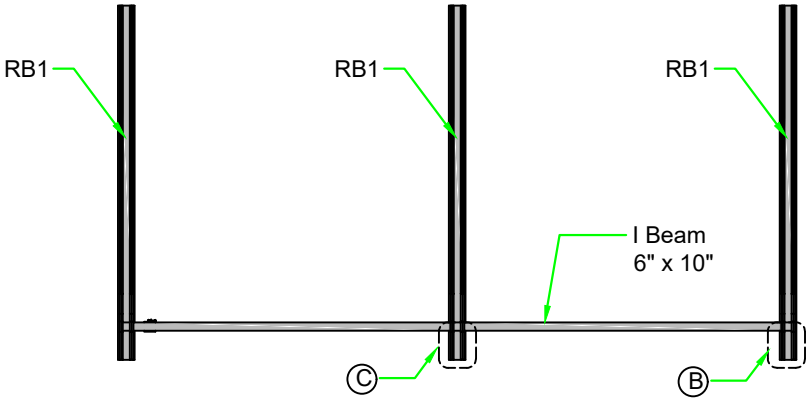
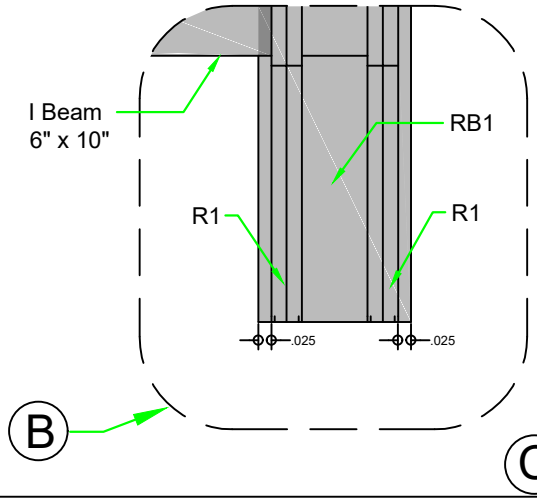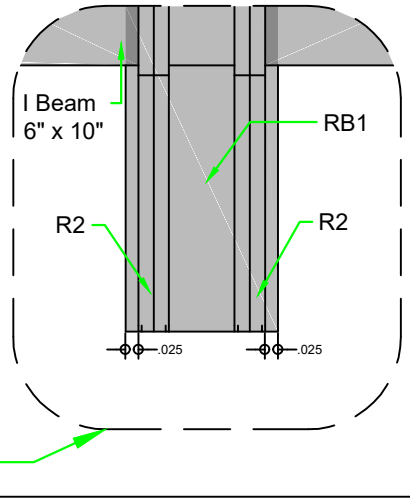
HOIST DETAILED PLAN